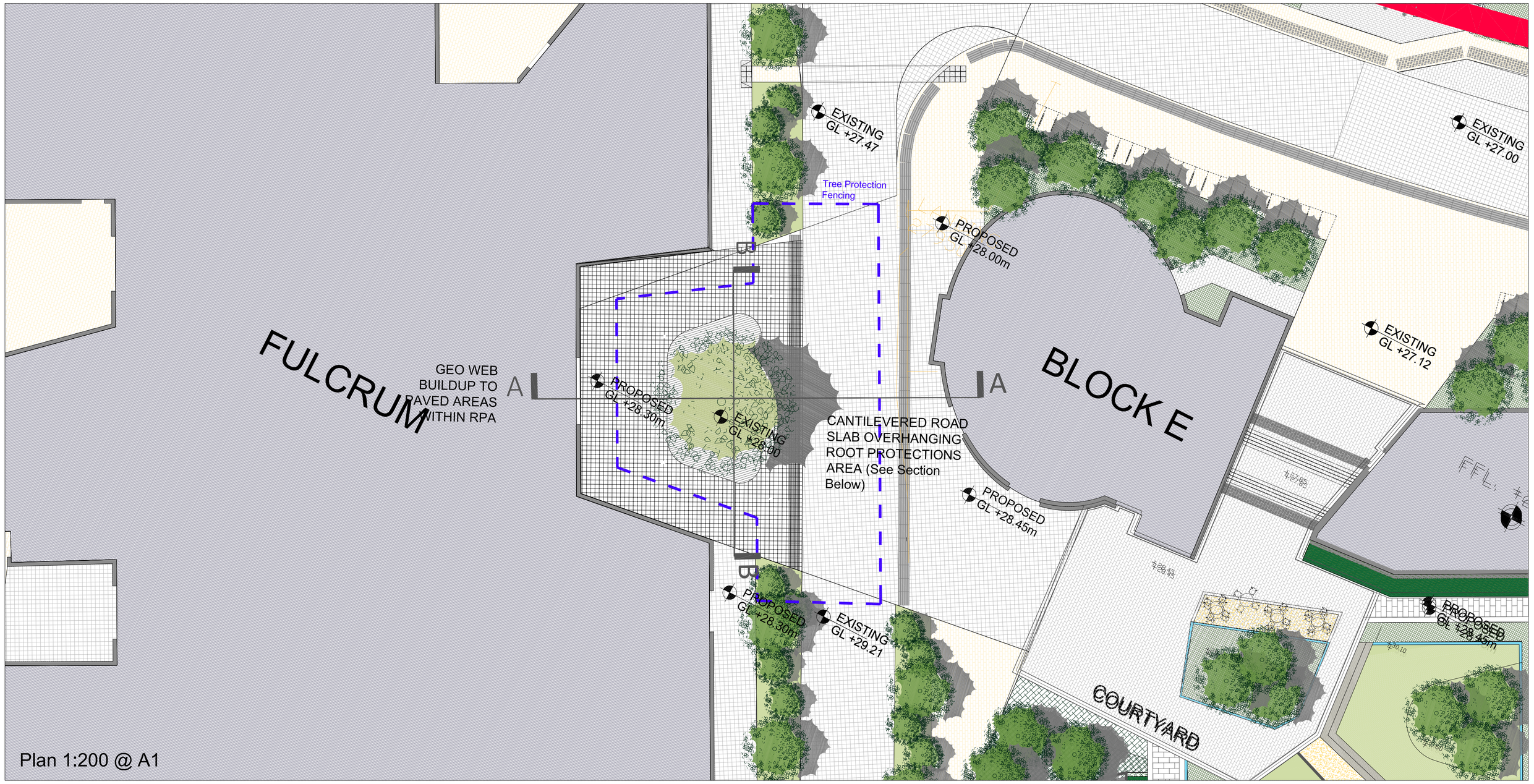

Plan 1:200 @ A1

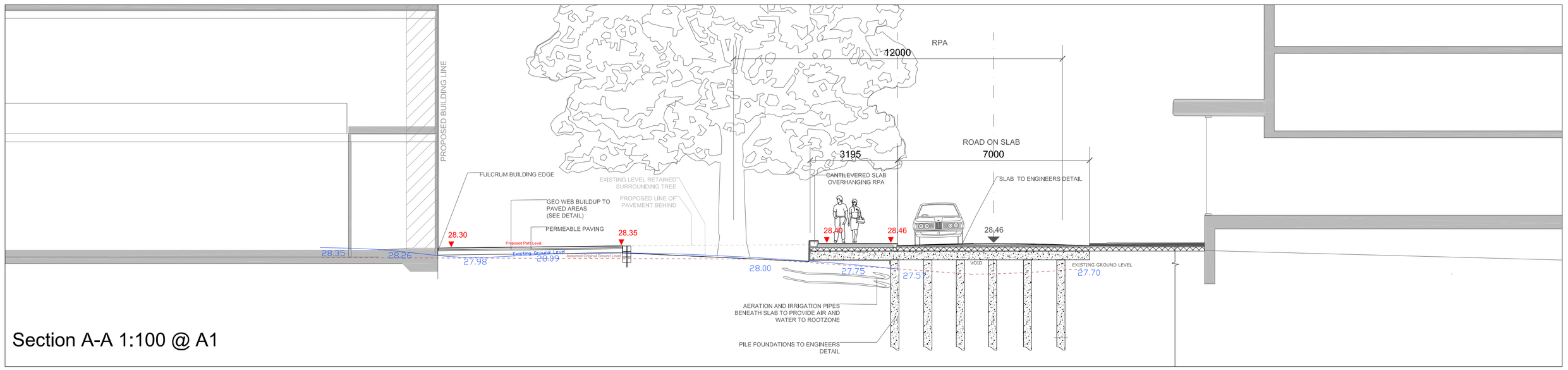

Section A-A 1:100 @ A1

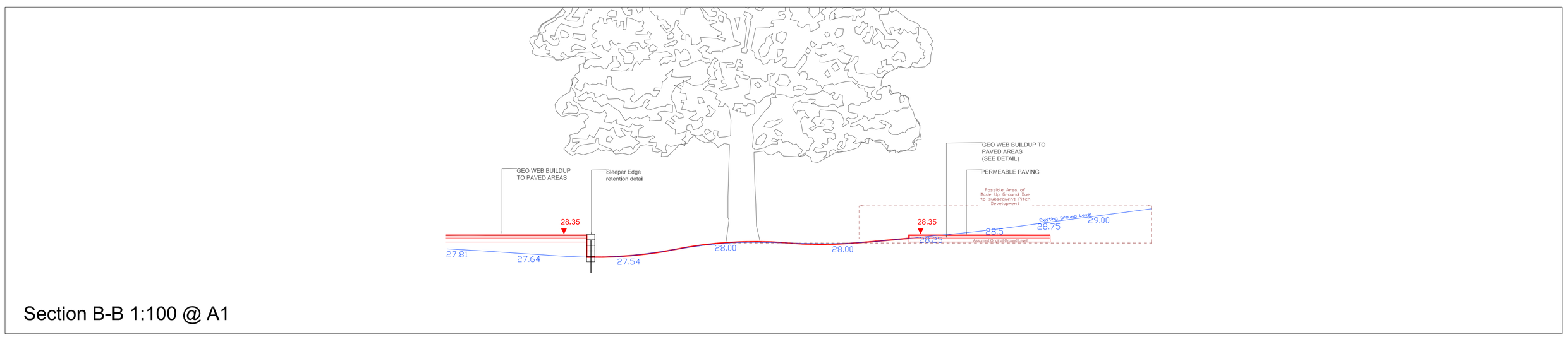

Section B-B 1:100 @ A1

Geo-Web buildup to areas where design levels are increasing above existing ground level Scale 1:20@A1

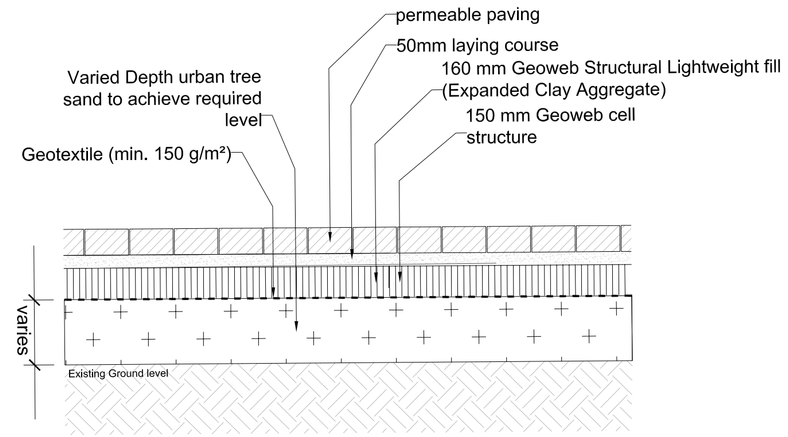

Geo-Web buildup to areas retaining existing ground level Scale 1:20@A1

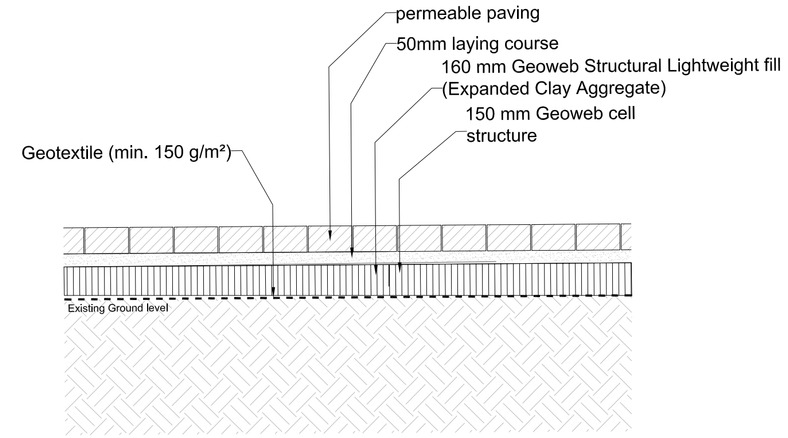

Construction Design- Geo-Web buildup to protect rootzone Scale 1:20@A1

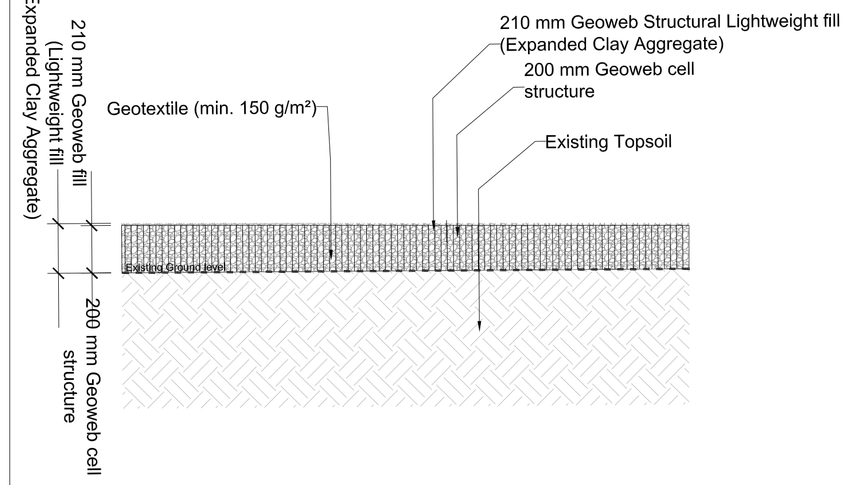

REV	DESCRIPTION	ISSUED BY	DATE

MITCHELL + ASSOCIATES
LANDSCAPE ARCHITECTURE URBAN DESIGN

Unit 5, Woodpark, The Rise, Glasnevin, Dublin 9, Ireland t: + 353 1 454 5066 e:info@mitchellassoc.net

PROJECT
UCD STUDENT MASTERPLAN

CLIENT
UCD

JOB NO.
LUCD026

DRAWING
TREE RETENTION AT FULCRUM BULDING

DRAWING NO.
130

DRAWN BY	CHECKED	DATE
Fergal Parlon	AH	12.09.2017
STATUS: PLANNING	**SCALE** As shown	**REVISION** 0

NOTES:
All dimensions are in millimeters unless otherwise stated and shall be checked and confirmed by the contractor on site. Any discrepancies shall be immediately reported to the landscape architects. Work to figured dimensions only • Do not scale from drawing. Do Not Scale. Use Figured Dimensions Only. Not for Construction Purposes unless Specifically Marked.

© THIS DRAWING IS COPYRIGHT OF MITCHELL + ASSOCIATES